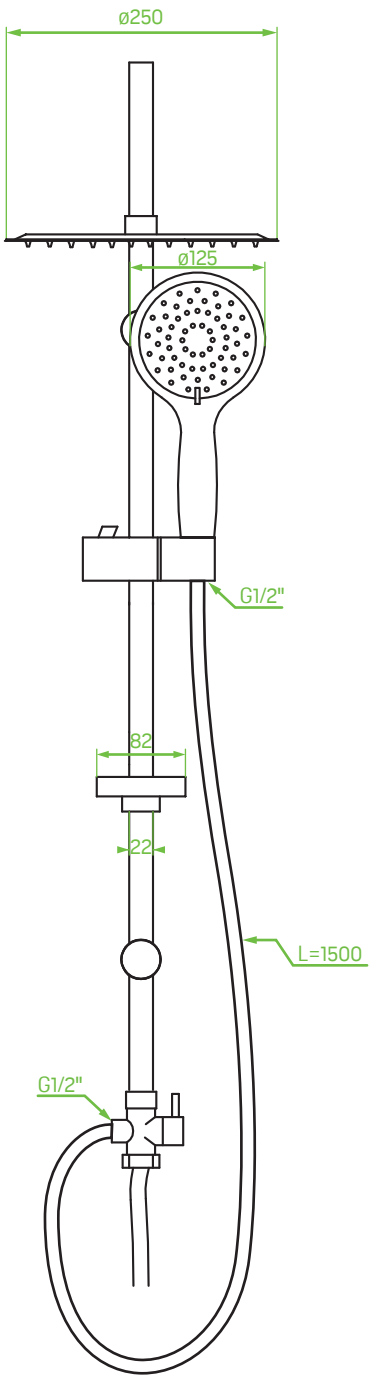

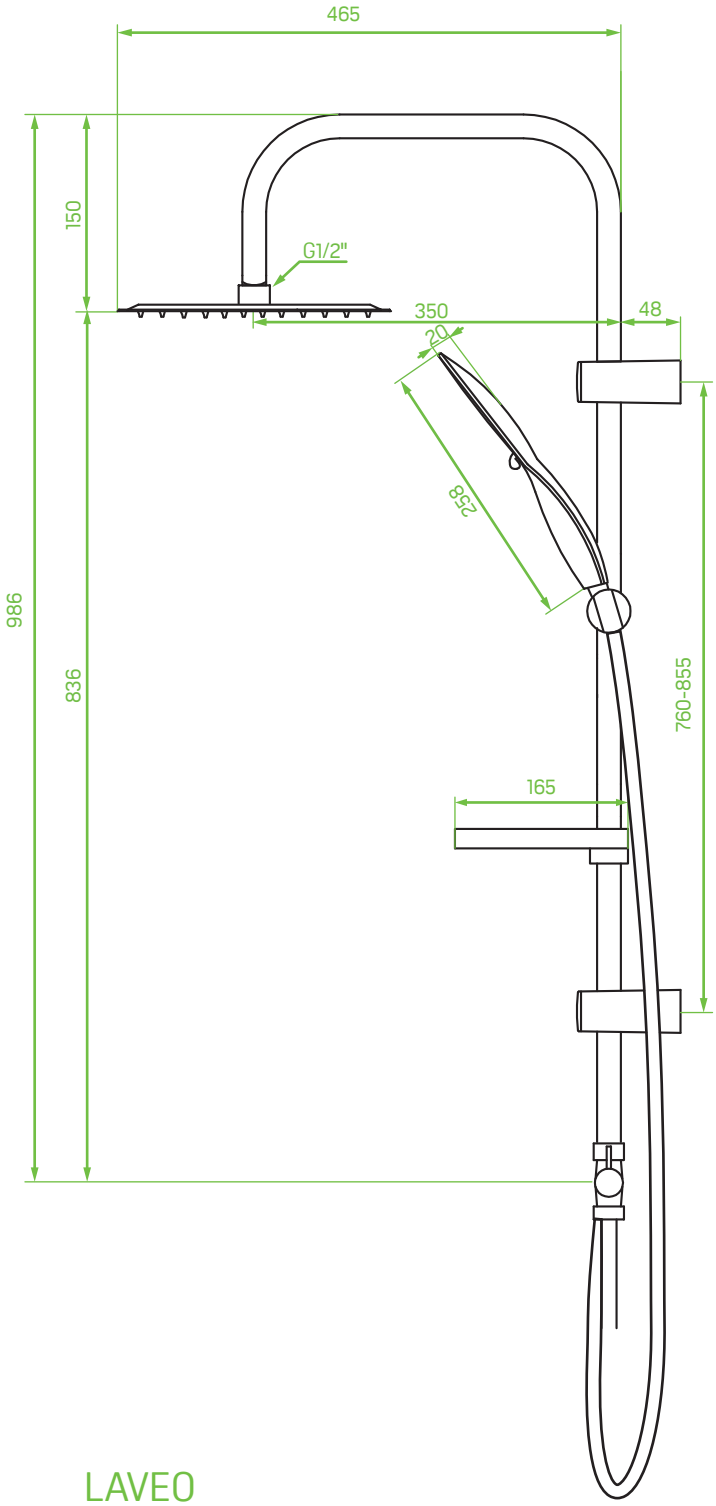

LAVEO
PL2 x00X
1:7
(mm)